jaga

Eyecatchers

IGUANA CORNER

€ 2016-2017.EX

jaga

Eyecatchers
* From design to art *

IGUANA CORNER

A childs drawing of the sun shining.

Warmth with a symbolic value. Inspired by a child's drawing, an interpretation of the brightly shining sun, transformed into a fully functional work of art.
The only thing the Iguana Corner needs to provide heat: a quiet little corner. Also available in heights 125 and 150 cm, specially designed for installation above the bathtub.
Also available as "Plus" version for low flow temperatures.

Top 10 Design Award Winner 2000

ISH 1999 DESIGN PLUS

IGUANA CORNER traffic white 333, optional towel rail

IGUANA CORNER

IGUANA CORNER

DIMENSIONS *(in cm)*

CORNER

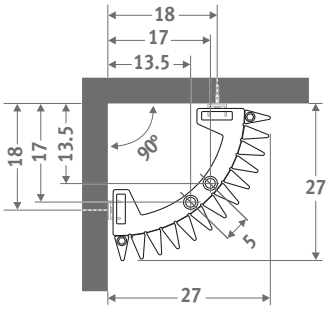

CORNER PLUS

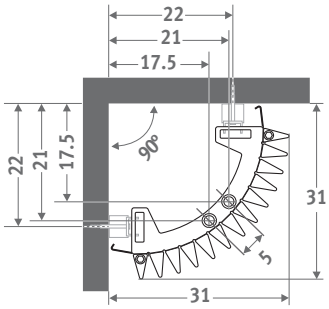

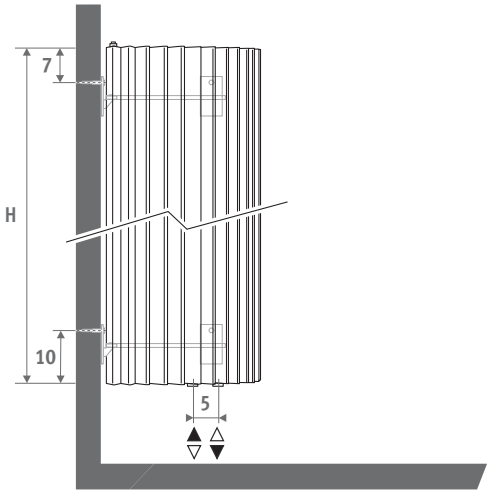

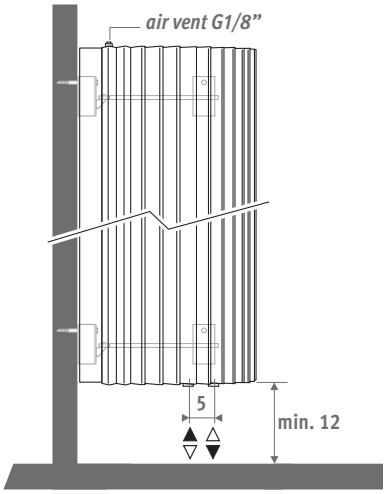

DELIVERY

- central connection MM underneath
- wall fixing
- 2 chrome-plated air vents G1/8"
- Iguana Plus is supplied with two side panels

COLOURS

Environmentally friendly, scratch-resistant, high UV resistant powder coating.

Standard colours:

- traffic white RAL 9016 (333), smooth satin matt
- sandblast grey (001), fine texture metallic

Other colours: see colour chart.

CONNECTION

Top connection:
specify code 45 or 54 instead of MM (1° number is flow).
No insert pipe should be ordered. Provide an air vent on the central heating pipework.

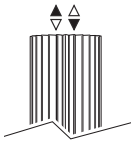

One pipe connection:
connection sets 41, 42, 48 or 49.
Max. 2 radiators per heating ring.

CONNECTION SETS

To guarantee the output of the Iguana models and to limit the pressure drop, Jaga recommends the use of 15/1 minimum diameter pipes.

Connection set to the wall with a Deco-Pro valve

TRV head and sleeve couplings included.

set 48 BRUSHED STAINLESS STEEL	€
CODE.PW3.PS.1...	215,80

set 41 CHROME	€
CODE.PW3.DW.1...	147,90
CODE.PW3.DC.1...	158,70

fill in sleeve coupling code

Precision metal tube 15/1	**115**
Precision metal tube 16/1	**116**
Precision metal tube 18/1	**118**
RPE/ALU tube 16/2	**316**
RPE/ALU tube 18/2	**318**

Other connections:

See chapter "Connection sets and valves" for all connection options and technical information

OPTIONS

Towel rail / hat rack in chrome-plated aluminium

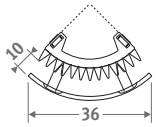

Hat rack consists of a towel rail and 5 coat hooks

CODE	€
Towel rail	
9087.043466	**202,30**
Hat rack	
9087.044466	**233,10**

IGUANA CORNER

Iguana+ COLLECTION

40% more warmth

CORNER

code	height	length	colour	conn.
CORW .	125	027 .	XXX	/MM

fill in colour code

L	H	Watts 75/65	Watts 55/45	€ st. colour	€ other
027	125	723	334	**677,00**	**812,40**
	150	834	384	**693,90**	**832,80**
	180	967	443	**744,50**	**893,20**
	192	1021	467	**773,40**	**928,10**
	200	1058	483	**791,10**	**949,30**
	220	1149	523	**837,70**	**1005,30**
	240	1242	564	**886,30**	**1063,50**

CORNER PLUS

code	height	length	colour	conn.
COPW .	125	031 .	XXX	/MM

fill in colour code

L	H	Watts 75/65	Watts 55/45	€ st. colour	€ other
031	125	860	436	**880,20**	**1056,30**
	150	990	501	**902,10**	**1082,40**
	180	1145	577	**967,70**	**1161,20**
	192	1207	607	**1005,40**	**1206,50**
	200	1249	627	**1028,30**	**1234,00**
	220	1352	677	**1088,90**	**1306,60**
	240	1458	729	**1152,30**	**1382,60**

EN442 output at 20°C room temperature

OPTION hat rack

IGUANA CORNER granite gray 028, optional towel rail

EN 442 EURONORM

Jaga International
Verbindingslaan z/n
B-3590 Diepenbeek

Tel.: +32 (0)11 29 41 16
Fax: +32 (0)11 29 41 60
export@jaga.be

The information in this price list is correct at the time of printing.
Jaga reserves the right to change product specification at any time in line with our policy of continuous improvement and innovation.
All prices in Euro, exclude VAT. Prices valid from 1 August 2016.
Replaces all existing price lists.

240616 - JAGA N.V.