jaga

Eyecatchers

IGUANA CIRCO FREESTANDING

€ 2016-2017.EX

jaga

Eyecatchers
* From design to art *

IGUANA CIRCO FREESTANDING

A childs drawing of the sun shining.

Inspired by a child's drawing, the Iguana Circo is an interpretation of the brightly shining sun, transformed into a fully functional work of art. Iguana has the essential, natural yet light hearted touch that creates a feeling of real warmth in its modern design. It's heating straight from the soul. Iguana Circo was the first "sun radiator". Available as a wall model, freestanding or to assemble around architectural columns.

Top 10 Design Award Winner 2000

ISH 1999 DESIGN PLUS

IGUANA CIRCO FREESTANDING traffic white 333

IGUANA CIRCO FREESTANDING

IGUANA CIRCO

DIMENSIONS *(in cm)*

FREESTANDING

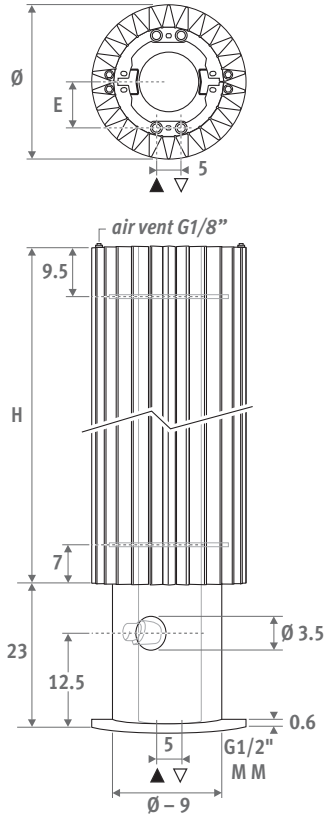

PILLAR COVER

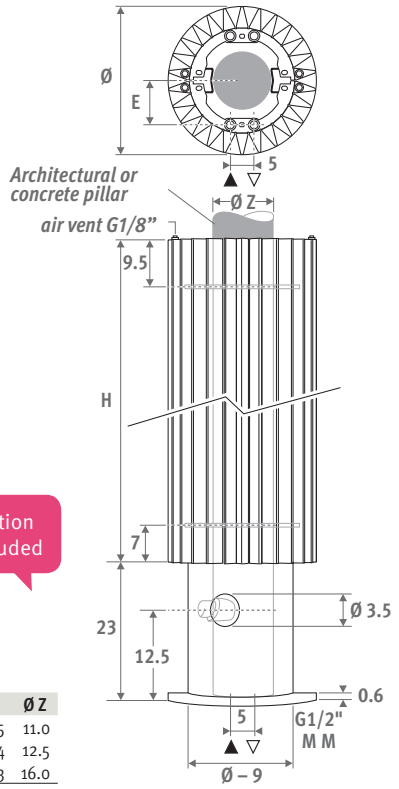

Connection set included

Ø	E	Ø Z
27.8	7.5	11.0
31.3	9.4	12.5
34.8	11.3	16.0

DELIVERY

Connection set with thermostatic valve, lockshield, 4 chrome-plated air vents G1/8" and sleeve couplings M24 included.

Circo freestanding:
- Iguana Circo in 2 parts, to be mounted around the suspension column, including all parts for hydraulic connection
- support with suspension column and guards with opening for the TRV head

Circo pillar cover:
- Iguana Circo in 2 parts, including all parts for hydraulic connection and guards with opening for the TRV head
- suspension brackets for mounting around column

COLOURS

Environmentally friendly, scratch-resistant, high UV resistant powder coating.

Standard colours:
- traffic white RAL 9016 (333), smooth satin matt
- sandblast grey (001), fine texture metallic

Other colours: see colour chart

CONNECTION

To guarantee the output of the Iguana models and to limit the pressure drop, Jaga recommends the use of 15/1 minimum diameter pipes.

Central connection

The opening for the TRV head in the guard is on the left **/CL**. If a right hand flow is required please amend the code suffix using **/CR**.

Position flow and return pipe.

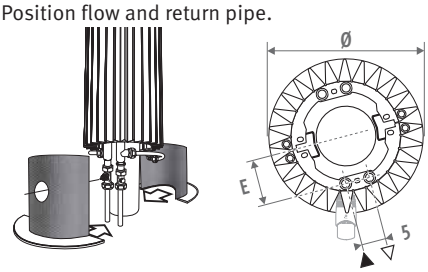

Sleeve couplings M24

see "Connection sets and Valves" (included in the price).

Thermostatic head

(not included in the price).

CODE			€
	5090.1124	stainless steel effect	**62,00**
	5090.1111	chrome-plated	**44,80**
	5090.1110	chrome-plated/white	**34,20**

OPTIONS

Towel rail / hat rack in chrome-plated aluminium

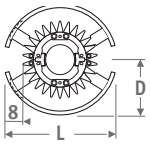

Hat rack consists of a towel rail and 5 coat hooks

CODE	L rad.	L	D	€/P.
Towel rail				
9087.013427	ø 27	43	22	**202,30**
9087.013427	ø 31	43	22	**202,30**
9087.013493	ø 34	49	25	**202,30**
Hat rack				
9087.014427	ø 27	43	22	**233,10**
9087.014427	ø 31	43	22	**233,10**
9087.014493	ø 34	49	25	**233,10**

Foot for Circo freestanding in concrete floor

CODE	L rad.	€
9086.000278	ø 27	**73,10**
9086.000313	ø 31	**85,80**
9086.000348	ø 34	**98,50**

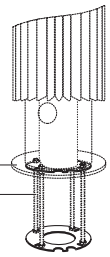

PILLAR COVER FREESTANDING

code	height	length	colour	conn.
CIRP .	180	027 .	XXX	/XX

fill in colour code — CL or CR

	Watts 75/65	Watts 55/45	€ st. colour	€ other
L	**H 180**			
027	1602	769	**1513,90**	**1816,60**
031	1893	909	**1688,40**	**2026,10**
034	2184	1049	**1865,40**	**2238,50**
L	**H 192**			
027	1707	827	**1551,80**	**1862,20**
031	2018	978	**1733,90**	**2080,70**
034	2328	1128	**1916,80**	**2300,10**
L	**H 200**			
027	1773	865	**1574,80**	**1889,80**
031	2096	1022	**1761,70**	**2114,10**
034	2418	1179	**1948,50**	**2338,10**
L	**H 220**			
027	1923	953	**1635,80**	**1962,90**
031	2272	1126	**1831,50**	**2197,80**
034	2622	1299	**2030,30**	**2436,30**
L	**H 240**			
027	2048	1030	**1695,60**	**2034,80**
031	2421	1218	**1903,80**	**2284,60**
034	2793	1405	**2113,80**	**2536,40**

code	height	length	colour	conn.
CIRF .	180	027 .	XXX	/XX

fill in colour code — CL or CR

	Watts 75/65	Watts 55/45	€ st. colour	€ other
L	**H 180**			
027	1602	769	**1631,40**	**1957,60**
031	1893	909	**1839,60**	**2207,50**
034	2184	1049	**2071,90**	**2486,20**
L	**H 192**			
027	1707	827	**1669,60**	**2003,60**
031	2018	978	**1884,50**	**2261,50**
034	2328	1128	**2123,50**	**2548,20**
L	**H 200**			
027	1773	865	**1691,70**	**2030,10**
031	2096	1022	**1912,30**	**2294,80**
034	2418	1179	**2155,10**	**2586,30**
L	**H 220**			
027	1923	953	**1752,70**	**2103,20**
031	2272	1126	**1982,80**	**2379,40**
034	2622	1299	**2237,10**	**2684,40**
L	**H 240**			
027	2048	1030	**1812,70**	**2175,30**
031	2421	1218	**2054,50**	**2465,40**
034	2793	1405	**2320,30**	**2784,40**

EN442 output at 20°C room temperature

OPTION hat rack

IGUANA CIRCO PILLAR COVER sandblast grey 001

EN 442 EURONORM

Jaga International
Verbindingslaan z/n
B-3590 Diepenbeek

Tel.: +32 (0)11 29 41 16
Fax: +32 (0)11 29 41 60
export@jaga.be

The information in this price list is correct at the time of printing.
Jaga reserves the right to change product specification at any time in line with our policy of continuous improvement and innovation.
All prices in Euro, exclude VAT. Prices valid from 1 August 2016.
Replaces all existing price lists.

240616 - JAGA N.V.